Current part is item (16) on diagram. Available at www.oshkoshequipment.com

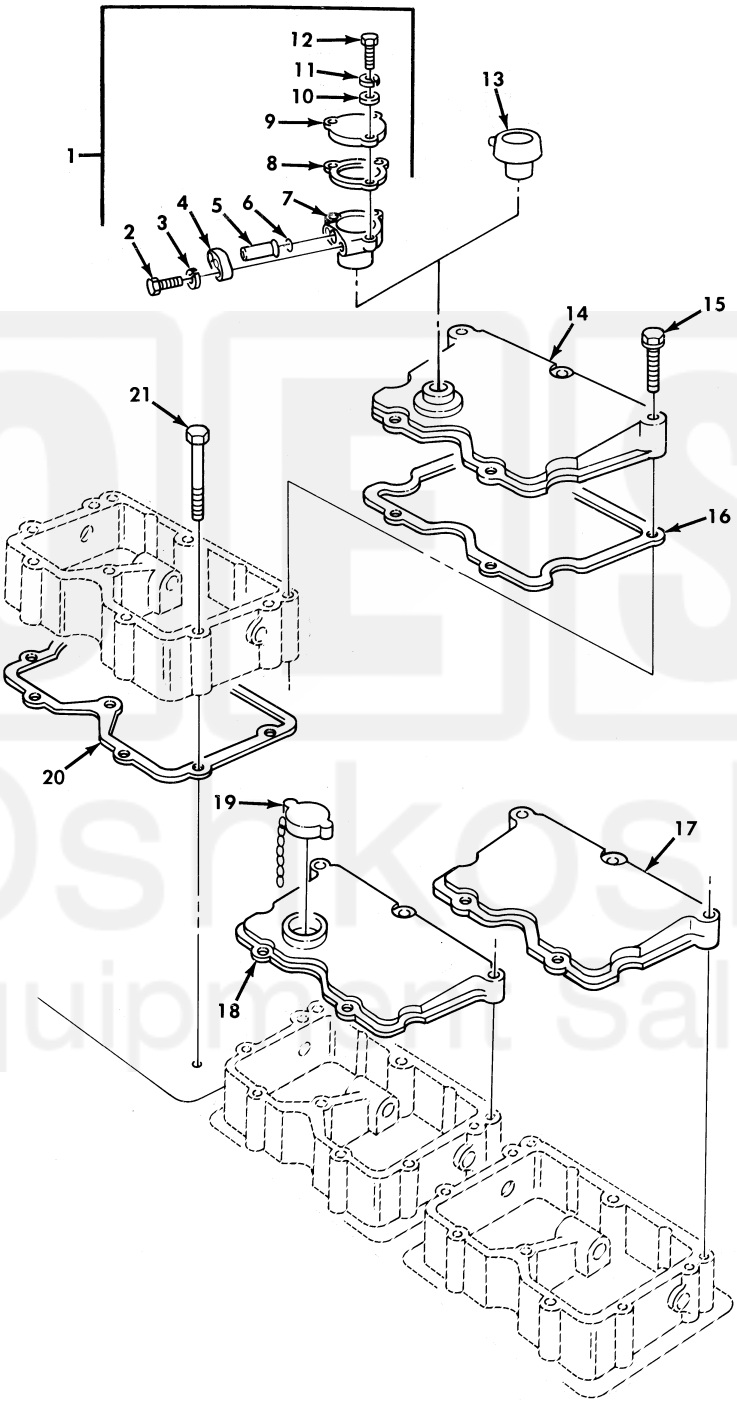

Figure 17. Rocker Lever Housing Covers and Breather.

Current part is item (16) on diagram. Available at www.oshkoshequipment.com

Current part is item (16) on diagram. Available at www.oshkoshequipment.com

(1) ITEM NO	(2) SMR CODE	(3) NSN	(4) CAGEC	(5) PART NUMBER	(6) DESCRIPTION AND USABLE ON CODE (UOC)	(7) QTY
					GROUP 0105 VALVES,CAMSHAFTS,AND TIMING SYSTEM	
					FIG. 17 ROCKER LEVER HOUSING COVERS AND BREATHER	
1	PAOOO	2815-00-920-2110	15434	3028273	PARTS KIT,BREATHER USE WITH DEEP WATER FORDING.....	1
2	PAOZZ	5305-01-144-6233	15434	3021470	.SCREW,CAP,HEXAGON H.....	2
3	PAOZZ	5310-00-407-9566	96906	MS35338-45	.WASHER,LOCK.....	2
4	PAOZZ	4730-00-349-9092	15434	68562	.FLANGE,PIPE.....	1
5	PAOZZ	4710-01-127-2340	15434	208716	.TUBE,VENT.....	1
6	PAFZZ	5331-00-417-3528	15434	S3101	.O-RING PART OF KIT P/N 3804272....	1
6	PAFZZ	5331-00-417-3528	15434	S3101	.O-RING PART OF KIT P/N 3011472....	1
7	PFOZZ		15434	3027892	.BREATHER.....	1
8	PAOZZ	5330-00-821-9164	15434	122135	.GASKET.....	1
9	PAOZZ	5340-01-177-7626	15434	3027893	.COVER,ACCESS.....	1
10	PAOZZ	5310-00-562-6560	15434	S631	.WASHER,FLAT.....	3
11	PAOZZ	5310-00-159-6209	96906	MS122032	.WASHER,LOCK.....	3
12	PAOZZ	5305-00-071-2505	80204	B1821BH025C088N	.SCREW,CAP,HEXAGON H.....	3
13	PAOZZ	2815-01-146-1092	15434	3008595	BREATHER NOT TO BE USED WITH DEEP WATER FORDING.....	1
14	PFFZZ	2815-01-146-1024	15434	3006358	COVER,ENGINE POPPET.....	1
15	PAFZZ	5305-01-118-8826	15434	3006182	SCREW,CAP,HEXAGON H.....	15
16	PAFZZ	5330-01-285-4827	15434	3054841	GASKET PART OF KIT P/N 3011472.....	3
16	PAFZZ	5330-01-285-4827	15434	3054841	GASKET PART OF KIT P/N 3804272.....	3
17	PAFZZ	2815-01-142-1732	15434	3006183	COVER,ACCESS.....	1
18	PFFZZ	2815-00-230-0069	15434	AR51289	COVER,ENGINE POPPET.....	1
19	PAOZZ	2590-00-421-9524	15434	208045	CAP,FILLER OPENING.....	1
20	PAFZZ	5330-00-861-8592	15434	3017750	GASKET PART OF KIT P/N 3011472.....	3
20	PAFZZ	5330-00-861-8592	15434	3017750	GASKET PART OF KIT P/N 3804272.....	3
21	PAFZZ	5305-01-129-6901	15434	3010589	SCREW,ASSEMBLED WAS.....	18

END OF FIGURE

Current part is item (16) on diagram. Available at www.oshkoshequipment.com